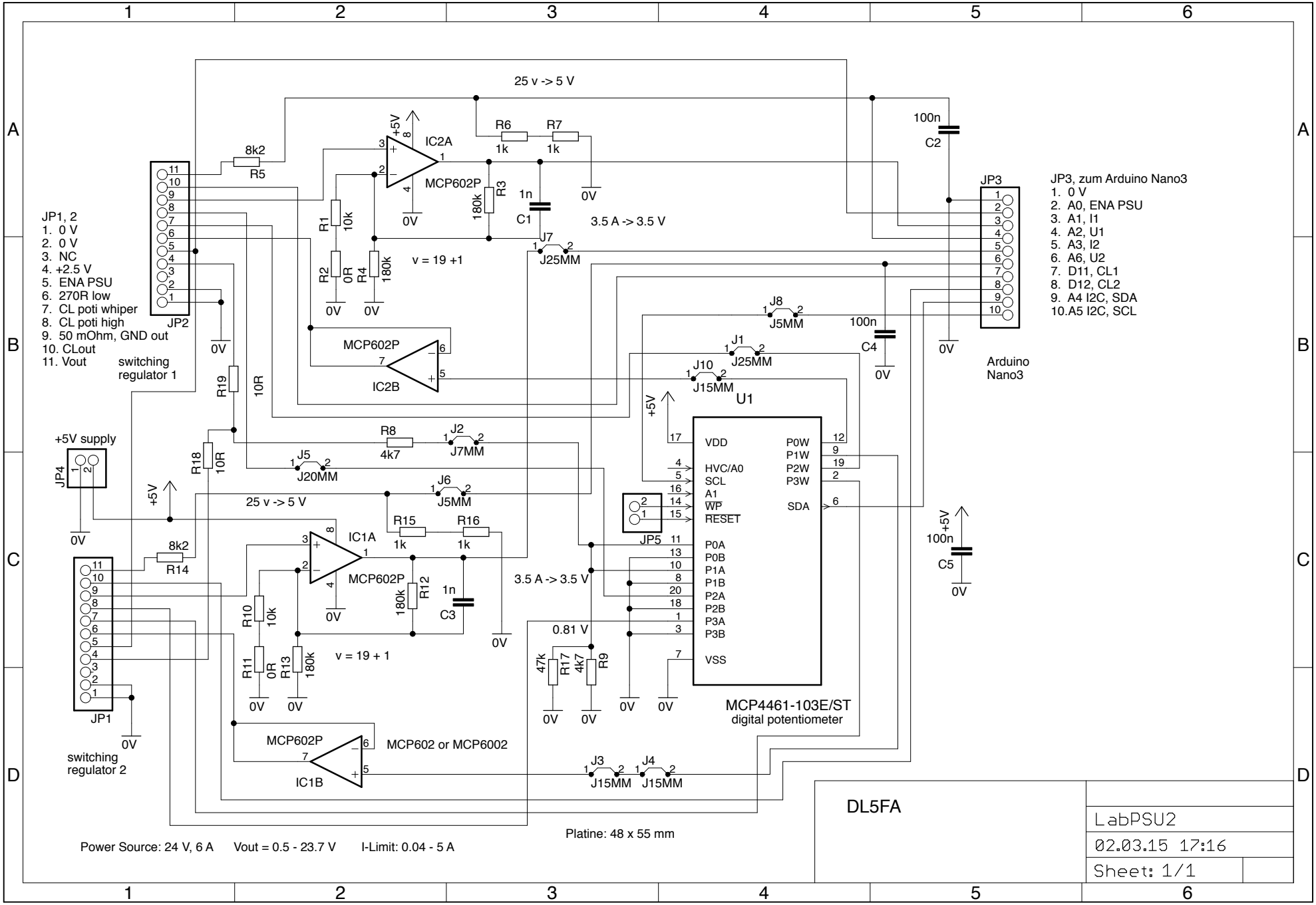

02.03.15 17:16 /Volumes/DAT/Users/rudi/Documents/eagle/LabPSU2/LabPSU2.sch (Sheet: 1/1)